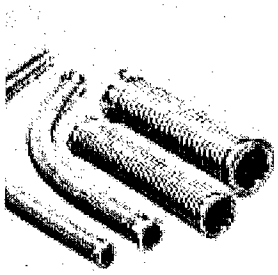

ISO-QF/LF Flexible Metal Hose - Thin Wall

Materials

- Flanges
  - 304 Stainless Steel
- Formed Flexible Hose
  - 321 Stainless Steel

Product Notes

- Thin wall design provides maximum flexibility
- Medium wall design for price economy
- Corrects misaligned connections
- Provides vibration isolation

Options: Call for price and delivery

- Custom Lengths
- Custom Flange Combination
- Braided Metal Hose

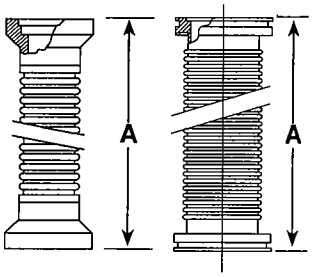

Fig 1 Fig 2

REFERENCE NUMBER	FLANGES	DRAWING FIGURE	NOMINAL TUBE I.D.	WALL THICKNESS	OAL A	UNIT PRICE
QF16-075-MH10	QF16	1	0.75	0.006	10	$ 95.00
QF16-075-MH12	QF16	1	0.75	0.006	12	$ 110.00
QF16-075-MH18	QF16	1	0.75	0.006	18	$ 150.00
QF16-075-MH20	QF16	1	0.75	0.006	20	$ 155.00
QF16-075-MH24	QF16	1	0.75	0.006	24	$ 165.00
QF16-075-MH36	QF16	1	0.75	0.006	36	$ 195.00
QF16-075-MH40	QF16	1	0.75	0.006	40	$ 235.00
QF16-075-MH48	QF16	1	0.75	0.006	48	$ 250.00
QF25-100-MH10	QF25	1	1.00	0.006	10	$ 105.00
QF25-100-MH12	QF25	1	1.00	0.006	12	$ 115.00
QF25-100-MH18	QF25	1	1.00	0.006	18	$ 153.00
QF25-100-MH20	QF25	1	1.00	0.006	20	$ 165.00
QF25-100-MH24	QF25	1	1.00	0.006	24	$ 168.00
QF25-100-MH36	QF25	1	1.00	0.006	36	$ 198.00
QF25-100-MH40	QF25	1	1.00	0.006	40	$ 225.00
QF25-100-MH48	QF25	1	1.00	0.006	48	$ 230.00
QF40-150-MH10	QF40	1	1.50	0.006	10	$ 132.00
QF40-150-MH12	QF40	1	1.50	0.006	12	$ 155.00
QF40-150-MH18	QF40	1	1.50	0.006	18	$ 206.00
QF40-150-MH20	QF40	1	1.50	0.006	20	$ 212.00
QF40-150-MH24	QF40	1	1.50	0.006	24	$ 228.00
QF40-150-MH36	QF40	1	1.50	0.006	36	$ 273.00
QF40-150-MH40	QF40	1	1.50	0.006	40	$ 275.00
QF40-150-MH48	QF40	1	1.50	0.006	48	$ 318.00
QF50-200-MH10	QF50	1	2.00	0.006	10	$ 150.00
QF50-200-MH12	QF50	1	2.00	0.006	12	$ 165.00
QF50-200-MH18	QF50	1	2.00	0.006	18	$ 236.00
QF50-200-MH20	QF50	1	2.00	0.006	20	$ 245.00
QF50-200-MH24	QF50	1	2.00	0.006	24	$ 258.00
QF50-200-MH36	QF50	1	2.00	0.006	36	$ 303.00
QF50-200-MH40	QF50	1	2.00	0.006	40	$ 320.00
QF50-200-MH48	QF50	1	2.00	0.006	48	$ 348.00

A&N Corporation
707 Southwest 19th Avenue
Williston, Florida 32696
(352) 528-4100
1(800) FLANGE1
FAX (352) 528-3441
www.ancorp.com

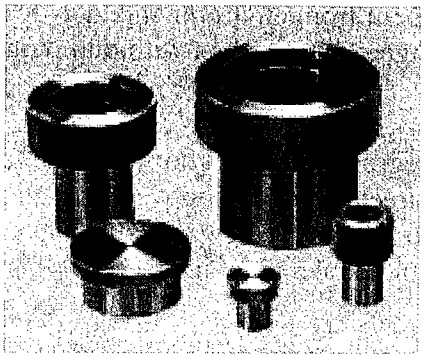

Quick Disconnects - Thick Wall

Materials:

- Body, Plug and Retaining Ring: 304 stainless steel or brass
- Nut: 303 Stainless Steel or Brass
- Seals: Buna-N® or Viton® o-ring

Product Features:

- Designed to accept standard inch tubing O.D.'s
- Infinitely rotatable, sexless connection to tubing or gauges
- Reusable seals

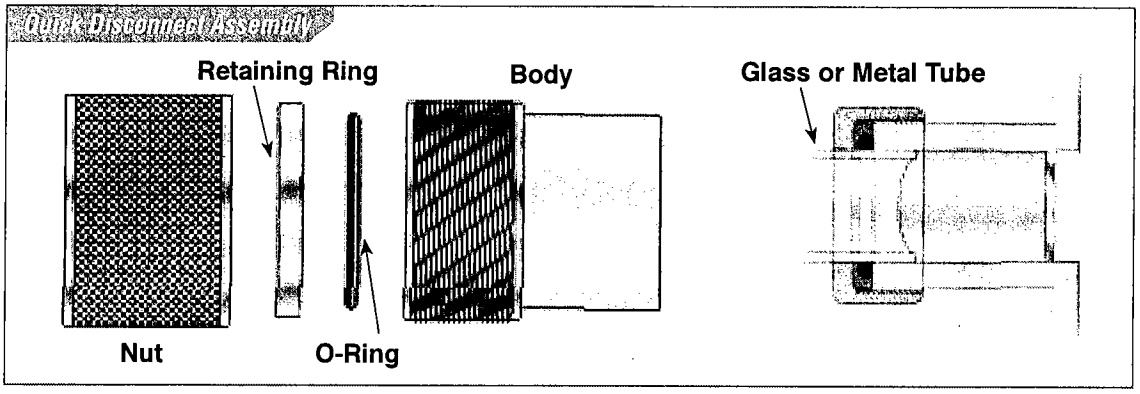

***ORDERING NOTE**

Quick Disconnects with a flange connection are located in Section 9 Hybrid Adapters.

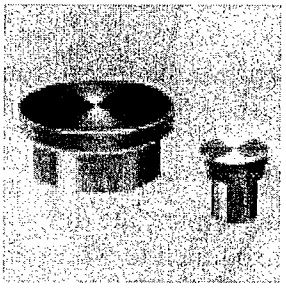

Blank Plug

Materials:

- 304 Stainless Steel or Brass

Product Features:

- Close unused quick disconnect ports
- Custom modify for your application

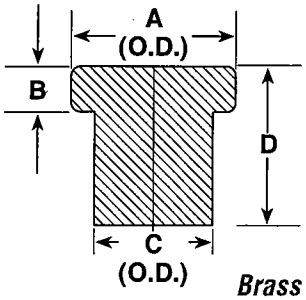

Stainless Steel ← Specs refer to both → ***Brass***

PART NUMBER	REFERENCE NUMBER	UNIT PRICE	A	B	C	D	PART NUMBER	REFERENCE NUMBER	UNIT PRICE
1000301	S-06-P	$ 14.00	0.375	0.250	0.063	0.750	1000321	B-06-P	$ 10.00
1000302	S-12-P	$ 14.00	0.375	0.250	0.125	0.750	1000322	B-12-P	$ 10.00
1000303	S-18-P	$ 14.00	0.375	0.250	0.188	0.750	1000323	B-18-P	$ 10.00
1000304	S-25-P	$ 14.00	0.500	0.250	0.250	0.750	1000324	B-25-P	$ 10.00
1000305	S-31-P	$ 14.00	0.625	0.250	0.313	0.750	1000325	B-31-P	$ 10.00
1000306	S-38-P	$ 14.00	0.625	0.250	0.375	0.750	1000326	B-38-P	$ 10.00
1000307	S-50-P	$ 14.00	0.750	0.250	0.500	0.750	1000327	B-50-P	$ 10.00
1000308	S-62-P	$ 17.00	0.875	0.250	0.625	0.750	1000328	B-62-P	$ 13.00
1000309	S-75-P	$ 17.00	1.000	0.250	0.750	0.750	1000329	B-75-P	$ 13.00
1000310	S-87-P	$ 17.00	1.125	0.250	0.875	0.750	1000330	B-87-P	$ 13.00
1000311	S-100-P	$ 17.00	1.250	0.250	1.000	0.750	1000331	B-100-P	$ 15.00
1000312	S-112-P	$ 24.00	1.375	0.250	1.125	0.750	1000332	B-112-P	$ 20.00
1000313	S-125-P	$ 24.00	1.500	0.250	1.250	0.750	1000333	B-125-P	$ 20.00
1000314	S-138-P	$ 24.00	1.625	0.250	1.375	0.750	1000334	B-138-P	$ 20.00
1000315	S-150-P	$ 35.00	1.750	0.250	1.500	0.750	1000335	B-150-P	$ 25.00
1000316	S-162-P	$35.00	1.875	0.250	1.625	0.750	1000336	B-162-P	$ 25.00
1000317	S-200-P	$ 38.00	2.250	0.250	2.000	0.750	1000337	B-200-P	$ 28.00

A&N Corporation

707 Southwest 19th Avenue
Williston, Florida 32696
(352) 528-4100
1(800) FLANGE1
FAX (352) 528-3441
www.ancorp.com

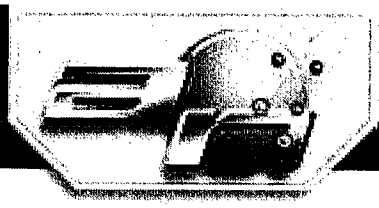

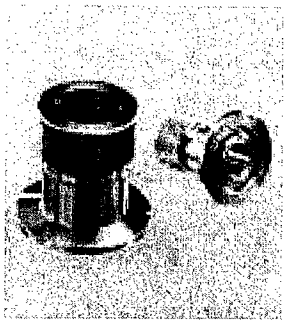

Quick Disconnect to QF

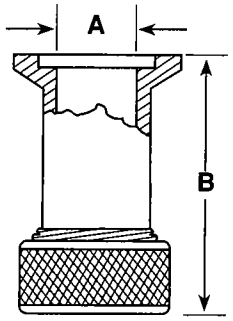

Materials

- Standard: 304 Stainless Steel
- Optional: Call for price and delivery

  - 316 Stainless Steel

  - Brass Nut– this option is only available on the Quick Disconnect fitting

Product Notes

- Adapts from Quick Disconnect fitting to ISO-QF flange
- Convenient for mounting gauges, instruments or adding tube ports without welds
- Detailed information about Quick Disconnect fittings is available in section 8

Options: Call for price and delivery

- Additional sizes

PART NUMBER	REFERENCE NUMBER	TUBE SIZE	A	B	UNIT PRICE
1000001	QF10XQ50	1/2"	0.52	1.500	$ 60.00
1000002	QF16XQ25	1/4"	0.27	1.400	$ 52.00
1000003	QF16XQ50	1/2"	0.52	1.500	$ 60.00
1000004	QF16XQ75	3/4"	0.77	1.800	$ 66.00
1000005	QF25XQ50	1/2"	0.52	1.500	$ 63.00
1000006	QF25XQ62	5/8"	0.64	1.700	$ 64.00
1000007	QF25XQ75	3/4"	0.77	1.800	$ 67.00
1000008	QF25XQ100	1"	1.02	2.000	$ 80.00
1000009	QF25XQ112	1 1/8"	1.14	2.000	$ 87.00
1000010	QF40XQ50	1/2"	0.52	1.500	$ 68.00
1000011	QF40XQ75	3/4"	0.77	1.800	$ 71.00
1000012	QF40XQ100	1"	1.02	2.000	$ 95.00
1000013	QF40XQ112	1 1/8"	1.14	2.000	$ 109.00
1000014	QF40XQ125	1 1/4"	1.27	2.000	$ 135.00
1000015	QF40XQ138	1 3/8"	1.39	2.100	$ 150.00
1000016	QF40XQ150	1 1/2"	1.52	2.400	$ 155.00
1000023	QF50XQ50	1/2"	0.52	1.500	$ 77.00
1000018	QF50XQ75	3/4"	0.77	1.800	$ 82.00
1000019	QF50XQ100	1"	1.02	2.000	$ 105.00
1000020	QF50XQ112	1 1/8"	1.14	2.000	$ 120.00
1000021	QF50XQ150	1 1/2"	1.52	2.400	$ 172.00
1000022	QF50XQ200	2"	2.02	2.400	$ 185.00

Wing-Nut Aluminum Clamp

Materials:

- Body: Die-Cast Aluminum
- Hardware (pins, studs and hinges): Die-Cast Aluminum

Product Notes

- Economy design for non-stressing vacuum applications

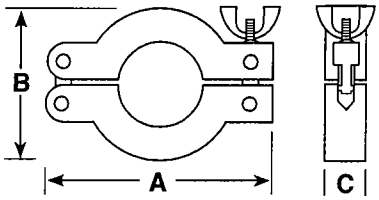

***ORDERING NOTE**

A&N recommends the line of A&N CNC machined clamps for all connections that may bear a lateral load, positive pressure or dangerous substances. See page 6.13 and 6.14

PART NUMBER	REFERENCE NUMBER	TUBE SIZE	A	B	C	UNIT PRICE
4040000	QF10/16-CW	1/2" + 3/4"	2.45	1.67	0.65	$ 5.25
4040001	QF25-CW	1"	2.86	2.16	0.65	$ 7.00
4040002	QF40-CW	1 1/2"	3.53	2.73	0.65	$ 8.25
4040003	QF50-CW	2"	4.80	3.70	0.90	$ 13.75

X2

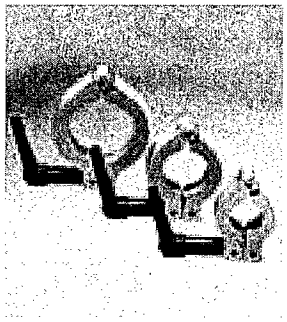

Ratchet Clamp

Materials:

- Body: Die-Cast Aluminum
- Hardware (pins, studs and hinges): Stainless Steel
- Ratchet Handle: Zinc Alloy

Product Notes

- Innovative design to ease installation
- Integrated handle lock to prevent accidental opening

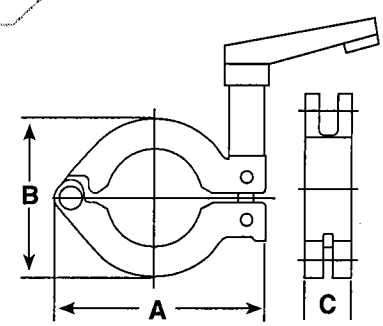

PART NUMBER	REFERENCE NUMBER	TUBE SIZE	A	B	C	UNIT PRICE
4040020	QF10/16-RC	1/2" + 3/4"	2.4	1.77	0.63	$ 10.00
4040021	QF25-RC	1"	2.83	2.17	0.63	$ 12.00
4040022	QF40-RC	1 1/2"	3.54	2.76	0.63	$ 13.00
4040023	QF50-RC	2"	4.45	3.54	0.79	$ 16.50

A&N Corporation

707 Southwest 19th Avenue
Williston, Florida 32696
(352) 528-4100
1(800) FLANGE1
FAX (352) 528-3441
www.ancorp.com

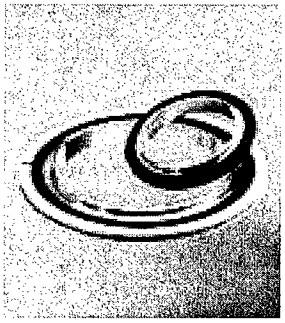

Centering Ring Assembly

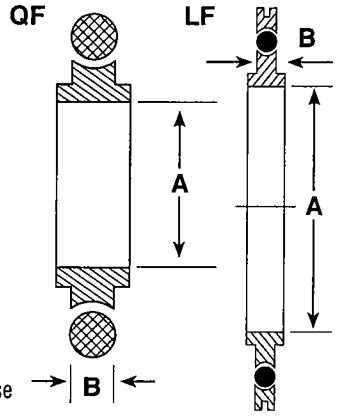

Materials:

- Centering Ring: 304 Stainless Steel, 316 Stainless Steel, Aluminum and Brass
- O-Ring: Buna-N, Viton or Silicone
- Spacer Ring (LF sizes only): Aluminum
- Temperature Limits:

	Low	Sustained High	Intermittant Use
Viton	-20°C	150°C	200°C
Buna®	-20°C	80°C	100°C
Silicone	-50°C	150°C	200°C

Silicone is chemically resistant

Product Notes

- Metal centering ring aligns flanges during seal assembly and provides support for the elastomer, sealing ring.

***ORDERING NOTE**

Centering rings with screen mesh are available on pg. 6.26

See pg. 6.24 for Brass Centering Ring Assemblies

316 Stainless Steel
Viton®

PART NUMBER	REFERENCE NUMBER	A	B	UNIT PRICE
4003005	QF16-075-SRV-316	0.63	0.21	$ 7.70
4003006	QF25-100-SRV-316	0.98	0.21	$ 8.25
4003007	QF40-150-SRV-316	1.53	0.21	$ 12.00
4003008	QF50-200-SRV-316	1.97	0.21	$ 15.75
4503008	LF63-250-SRV-316	2.65	0.154	$ 65.00
4503011	LF80-300-SRV-316	3.16	0.154	$ 82.00
4503014	LF100-400-SRV-316	3.90	0.154	$ 90.00

A&N Corporation
707 Southwest 19th Avenue
Williston, Florida 32696
(352) 528-4100
1(800) FLANGE1
FAX (352) 528-3441
www.ancorp.com

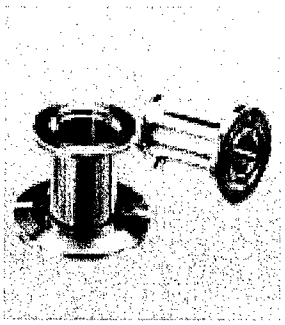

ISO-QF to QF Reducer Nipple

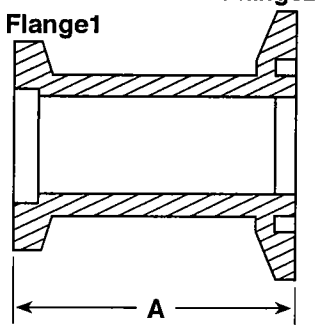

Materials

- Standard
  - 304 Stainless Steel
- Alternative: (Call for price and delivery)
  - 316 Stainless Steel
  - 6061 Aluminum

Product Notes

- Connects different ISO-QF sizes

Options: (Call for price and delivery)

- Custom Lengths
- Custom Flange Combinations
- ISO-QF large size flanges see pg. 6.4

Increase conductance with a conical reducer nipple. See ppg. 6.54 & 6.55

PART NUMBER	REFERENCE NUMBER	FLANGE 1	FLANGE 2	A	TUBE O.D.	UNIT PRICE
4000422	QF25X16	QF16	QF25	1.73	0.75	$ 35.00
4000424	QF40X16	QF16	QF40	1.73	0.75	$ 38.00
4000426	QF50X16	QF16	QF50	1.73	0.75	$ 43.00
4000428	QF40X25	QF25	QF40	1.73	1.00	$ 39.00
4000430	QF50X25	QF25	QF50	1.73	1.00	$ 45.00
4000432	QF50X40	QF40	QF50	1.73	1.50	$ 50.00

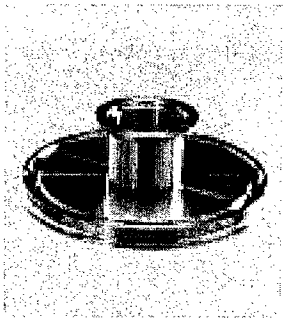

ISO-LF to QF Reducer Nipple

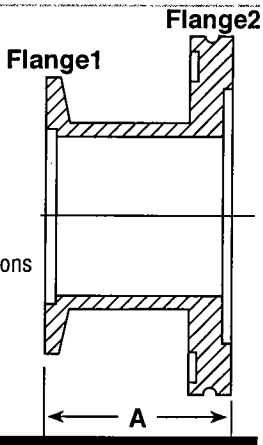

Materials

- Standard
  - 304 Stainless Steel
- Alternative: (Call for price and delivery)
  - 316 Stainless Steel
  - 6061 Aluminum

Product Notes

- Connects to ISO-LF to ISO-QF sizes

Options: (Call for price and delivery)

- Custom Lengths
- Custom Flange Combinations
- ISO-QF large size flanges see pg. 6.4
- ISO-LFB Flanges
  - Tapped Bolt Holes

Increase conductance with a conical reducer nipple. See ppg. 6.54 & 6.55

PART NUMBER	REFERENCE NUMBER	FLANGE 1	FLANGE 2	A	TUBE O.D.	UNIT PRICE
4500374	QF16XLF63	QF16	LF63	1.75	0.75	$115.00
4500375	QF25XLF63	QF25	LF63	1.75	1.00	$120.00
4500376	QF25XLF80	QF25	LF80	1.75	1.00	$155.00
4500377	QF25XLF100	QF25	LF100	1.75	1.00	$185.00
4500253	QF40XLF63	QF40	LF63	1.83	1.50	$125.00
4500255	QF40XLF80	QF40	LF80	1.83	1.50	$160.00
4500257	QF40XLF100	QF40	LF100	1.83	1.50	$190.00
4500378	QF40XLF160	QF40	LF160	1.75	1.50	$210.00
4500254	QF50XLF63	QF50	LF63	1.83	1.50	$140.00
4500256	QF50XLF80	QF50	LF80	1.83	2.00	$170.00
4500258	QF50XLF100	QF50	LF100	1.83	2.00	$195.00
4500379	QF50XLF160	QF50	LF160	1.75	2.00	$215.00

A&N Corporation
707 Southwest 19th Avenue
Williston, Florida 32696
(352) 528-4100
1(800) FLANGE1
FAX (352) 528-3441
www.ancorp.com